EP-08-1651-3

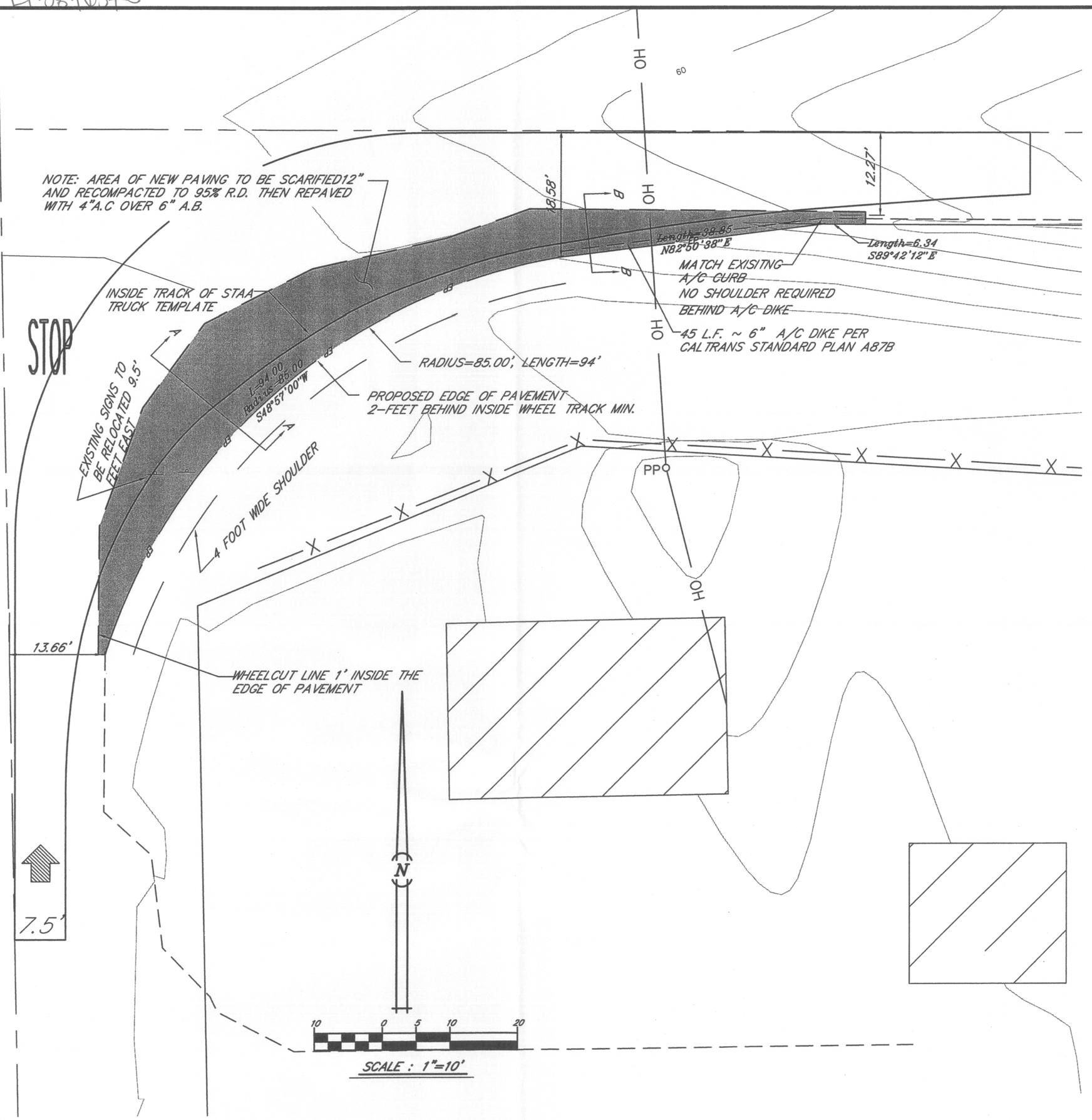

WEST SIDE AREA OF WORK

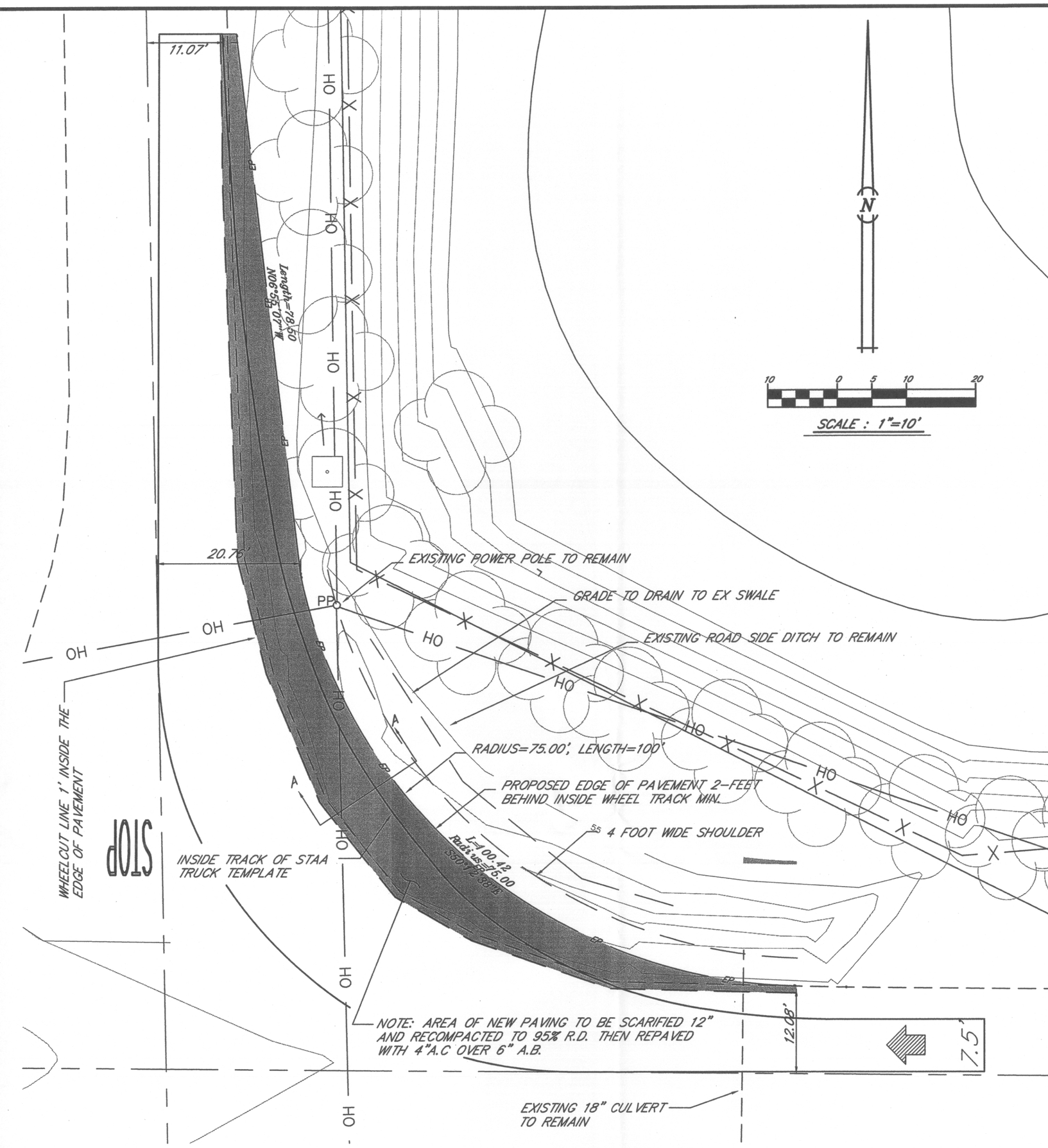

EAST SIDE AREA OF WORK

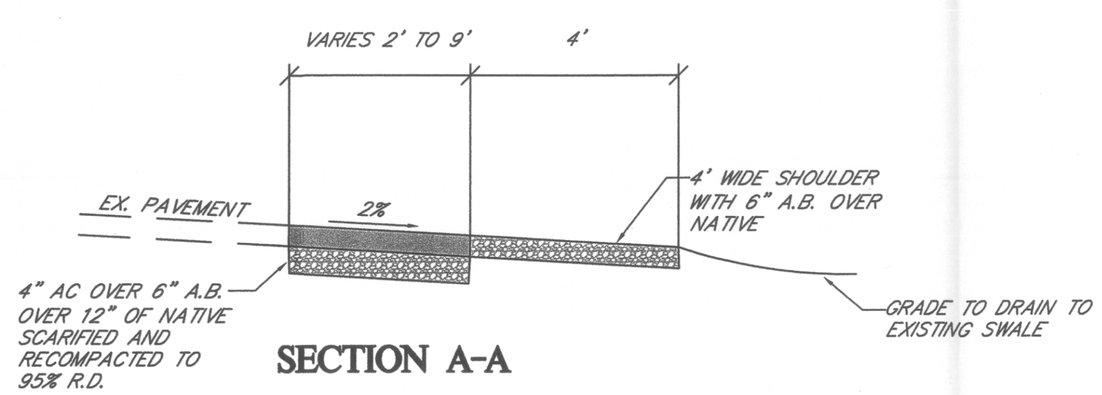

SECTION A-A

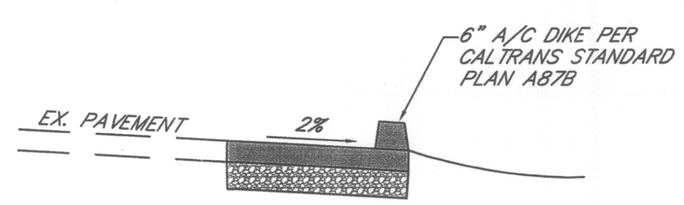

SECTION B-B

TOPOGRAPHY SURVEY SHOWN WAS CONDUCTED BY ASPEN SURVEY COMPANY ON JANUARY 15, 2008

REGISTERED PROFESSIONAL ENGINEER RODRICK H. HAWKINS No. 50188 CIVIL STATE OF CALIFORNIA

4/24/08

RODRICK H. HAWKINS R.C.E. 50188
CROLIE E. LINDSAY R.C.E. 31900, L.S. 4709

SYM.	DATE	DESCRIPTION OF REVISION	APPD.

BY: TJC
CHK: RHH
DATE: 2/2008
SCALE: 1"=10'
JOB #: 2795
FILE: BASE 2795

INTERSECTION IMPROVEMENTS WOODBRIDGE INTERSECTION

R.M.E. INCORPORATED
SAN JOAQUIN COUNTY, CALIFORNIA

HAWKINS & ASSOCIATES ENGINEERING, INC.
436 MITCHELL RD.
MODESTO, CA. 95354
PH: (209) 575 - 4285
FX: (209) 578 - 4285

SHEET 3. OF 5.

2795

T:\2795 - Woodbridge On-Ramp\Improvement Plans\2795_base.DWG PLOTTED 4-24-08 08:41:36 AM